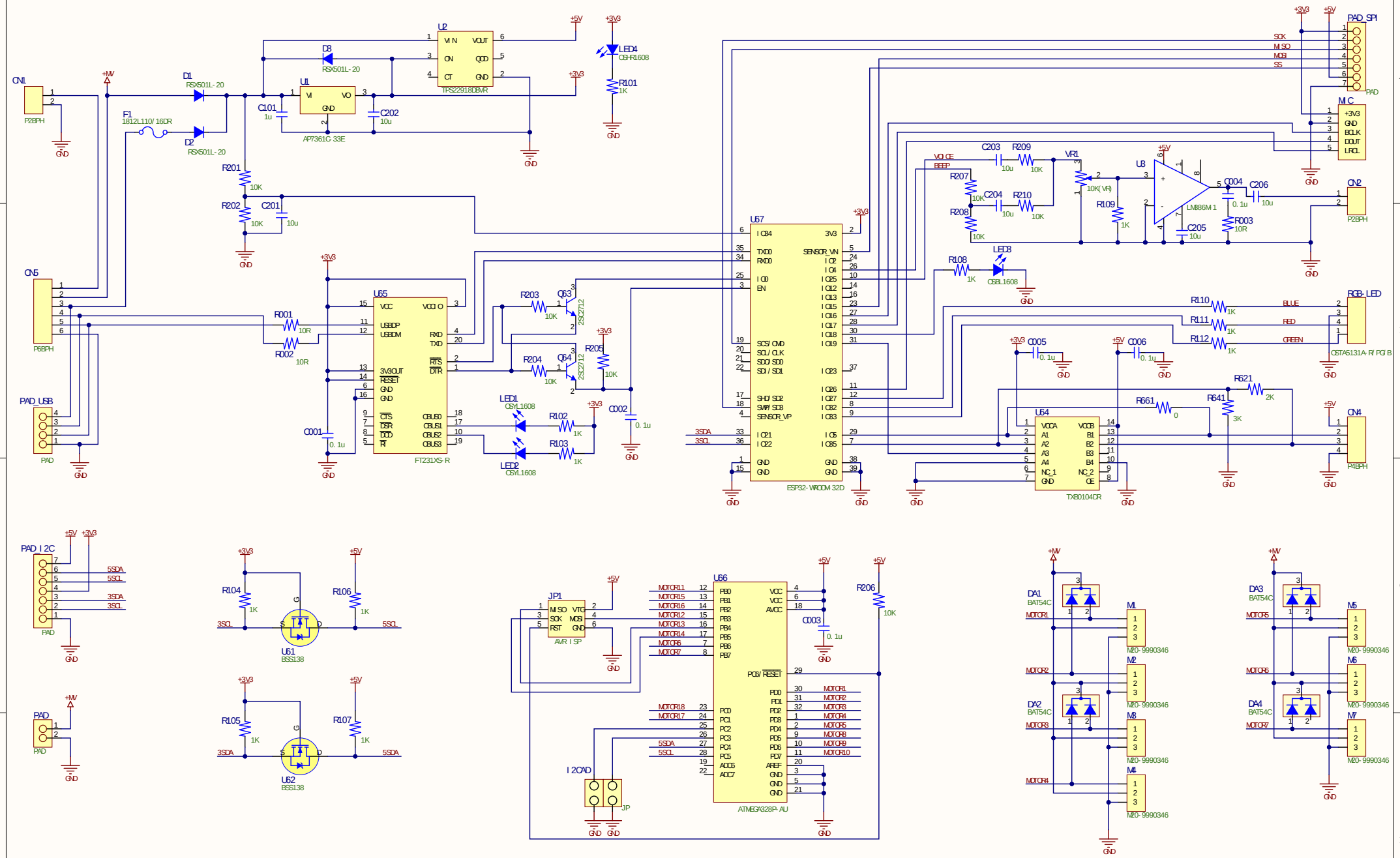
CN1
P2BPH
F1
1812L110/16DR
D1
RSX501L-20
D2
RSX501L-20
D3
RSX501L-20
U1
AP7361C-33E
U2
TPS22918DBVR
C101
1u
C202
10u
C201
10u
R201
10K
R202
10K
LED4
CSHR1608
R101
1K
CN5
P6BPH
R001
10R
R002
10R
PAD_USB
PAD
U65
FT231XS-R
C001
0.1u
R203
10K
R204
10K
Q63
Q64
2SC2712
R205
10K
LED1
CSYL1608
LED2
CSYL1608
R102
1K
R103
1K
C002
0.1u
U67
ESP32-WROOM-32D
PAD_SPI
MIC
CN2
P2BPH
C203
10u
R209
10K
R207
10K
C204
10u
R210
10K
R208
10K
VR1
10K(VR)
R109
1K
U8
LM386M-1
C004
0.1u
C206
10u
C205
10u
R003
10R
R108
1K
LED3
CSBL1608
RGB-LED
CSTA5131A-RVPGB
R110
1K
R111
1K
R112
1K
C005
0.1u
C006
0.1u
R621
2K
R661
0
R641
3K
U64
TXB0104DR
CN4
P4BPH
PAD_I2C
R104
1K
R106
1K
U61
BSS138
R105
1K
R107
1K
U62
BSS138
JP1
AVRISP
U66
ATMEGA328P-AU
R206
10K
C003
0.1u
I2CAD
JP
DA1
BAT54C
DA2
BAT54C
DA3
BAT54C
DA4
BAT54C
M1
M2
M3
M4
M5
M6
M7
M8
M20-9990346
Title
Qumcum32 MAIN(R321E)
Size
A3
Number
Revision
Date: 6/10/2022
Sheet of
File: S:\Cloud\..\MAIN(R321E)_T0.0.SchDoc
Drawn By: